KNX PS640-IP
Power Supply System

Technical specifications and installation instructions
Item number 70142

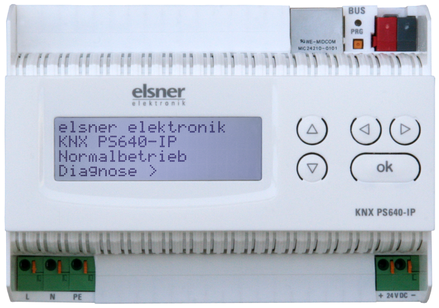

1. Description

The **Power Supply System KNX PS640-IP** combines the central functions of a KNX bus line: Power supply with throttle, IP router and IP interface:
The ***power supply unit*** of the **KNX PS640-IP** delivers a 29 V bus voltage for the KNX system and 24 V DC supply voltage for 24 V devices. Special operating conditions such as short circuit, electrical surge, overcharge or excess temperature are recorded and may be read off on the display. The present power discharge is displayed as well. It is possible to reset the connected bus devices directly by means of the key pad.

The ***IP router*** of the **KNX PS640-IP** allows for forwarding of telegrams between different lines via a rapid LAN (IP) backbone. The **KNX PS640-IP** therefore also takes on the function of a line coupler.

In parallel, the **KNX PS640-IP** can be used as ***interface for accessing the bus*** via IP. Like this, the KNX system can be configured and supervised from any PC in the LAN (Tunnelling). Access via smartphone (KNX app) is also possible.

This device works according to the KNXnet/IP specification using the core, the device management, the tunnelling and the routing part. The router of **KNX PS640-IP** has a filter table and is able to buffer up to 150 telegrams.

Functions:

- Delivers a **29 V KNX bus voltage** (reduced), output current max. 640 mA, short-circuit proof
- Delivers **24 V DC** (not reduced), output current max. 150 mA
- **Reset** of a line directly on the device
- Record of operating hours, overload, external overvoltage, internal overvoltage, short circuit and excess temperature
- Display of operating data bus voltage, bus current and temperature of the device
- The display may be shown in German, English, French, Italian, Spanish or Dutch
- **Routing:** Transfer of KNX data via LAN (rapid backbone)
- **Line coupler function** via LAN
- **Tunnelling:** Configuration and supervising of the KNX system from any PC in the LAN, access via smartphone (KNX app)

1.1. Deliverables

- Power Supply System

1.2. Technical data

Housing	Plastic material
Colour	White
Installation	Snap-on fitting on mounting rails according to DIN 43880
Degree of protection	IP 20 (after installation in distributor)
Dimensions	approx. 123 x 89 x 61 (W x H x D, mm), 7 width units
Weight	approx. 395 g
Ambient temperature	Operating 0…+45°C, Storage -25…+70°C
Ambient air humidity	5...95% rH, avoid condensation
Operating voltage	230 V AC, 50 Hz
Power consumption	Full load: approx. 28 W Standby: approx. 2.7 W
Outputs	• KNX bus voltage 29 V (reduced), Output current max. 640 mA, short-circuit proof • 24 V DC (not reduced), Output current max. 150 mA • LAN connector RJ45; 10BaseT (10Mbit/s), Supported internet protocols: ARP, ICMP, IGMP, UDP/IP and DHCP

The product conforms with the provisions of EU directives.

1.3. Application

1.3.1. Coupler function (KNXnet/IP Routing)

The **Power Supply System KNX PS640-IP** can operate as a line and/or backbone coupler. In both cases, the LAN (IP) acts as a backbone.

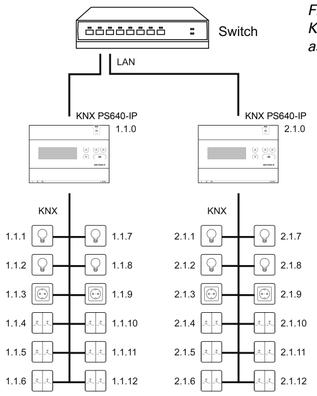

Fig. 1
KNX PS640-IP
as a line coupler

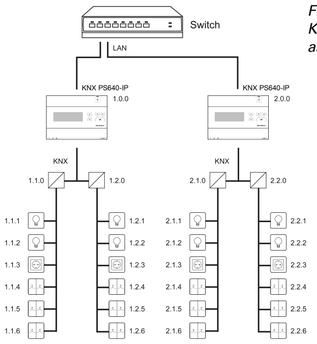

Fig. 2
KNX PS640-IP
as a backbone coupler

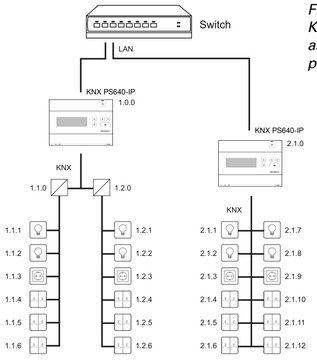

Fig. 3
KNX PS640-IP
as a backbone and line coupler

The physical address assigned to the **KNX PS640-IP** determines whether the device operates as a line or backbone coupler. If the physical address is in the form of x.y.0 (x, y: 1..15), the router operates as a line coupler. If it is in the form of x.0.0 (x: 1..15), the router acts as a backbone coupler.

Attention: If the **KNX PS640-IP** is used as a backbone coupler (x.0.0), there must be no KNX IP Router in the topology beneath it. For example, if a **KNX PS640-IP** has the physical address of 1.0.0, there must be no KNX IP Router with the address 1.1.0.

If the **KNX PS640-IP** is used as a line coupler (x.y.0), there must be no KNX IP Router in the topology above it. For example, if a **KNX PS640-IP** has the physical address of 1.1.0, there must be no KNX IP Router with the address 1.0.0.

The **KNX PS640-IP** has a filter table and thus contributes to reducing bus load. The filter table is automatically generated by the ETS.

Because of the speed difference between the Ethernet (10 Mbit/s) and KNX (9.6 kbit/s), a far greater number of telegrams can be transmitted on IP. If several consecutive telegrams are transmitted on the same line, they must be buffered in the router to avoid telegram loss. The **KNX PS640-IP** 750 has a memory for 150 telegrams (from IP to KNX/EIB).

1.3.2. Bus access (KNXnet/IP Tunnelling)

The **Power Supply System KNX PS640-IP** can be used as an interface to KNX. KNX can be accessed from any point in the LAN. For this purpose, a second physical address must be assigned in the ETS. Please refer to chapter "ETS Connection Manager".

2. Installation and Commissioning

Installation, testing, operational start-up and troubleshooting should only be performed by an authorised electrician.

CAUTION!
Live voltage!
There are unprotected live components inside the device.
- Inspect the device for damage before installation. Only put undamaged devices into operation.
- Comply with the locally applicable directives, regulations and provisions for electrical installation.
- Immediately take the device or system out of service and secure it against unintentional switch-on if risk-free operation is no longer guaranteed.

Use the device exclusively for building automation and observe the operating instructions. Improper use, modifications to the device or failure to observe the operating instructions will invalidate any warranty or guarantee claims.
Operate the device only as a fixed-site installation, i.e. only in assembled condition and after conclusion of all installation and operational start-up tasks, and only in the surroundings designated for it.
Elsner Elektronik is not liable for any changes in norms and standards which may occur after publication of these operating instructions.

2.1. Installation

Observe the correct installation. Incorrect installation may destroy the power supply system or connected electronic devices.

2.1.1. Housing

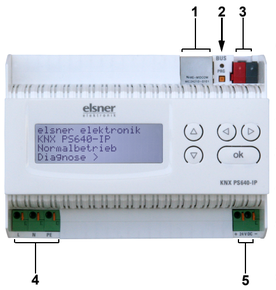

Fig. 4
1 LAN connection (RJ45, for Ethernet patch cable)
2 Programming LED and programming button
3 Bus connection (KNX terminal + / -)
4 Input operating voltage 230 V AC, L / N / PE
5 Output direct current voltage 24 V DC, + / -

Connections 4 and 5 are suitable for solid conductors up to 1.5

2.1.2. Scheme

Fig. 5

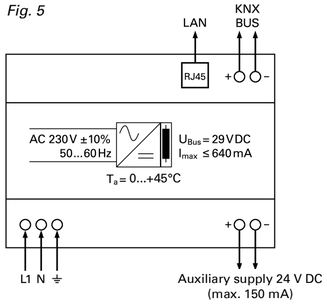

3. Operation (Settings at the Device)

3.1. Starting Position

```
elsner elektronik
KNX PS640-IP
Normal Operation
Diagnostics >
```

The following may be read off and set on the display of the **Power Supply System KNX PS640-IP**:
- Reset of a line
- Recall of the data memory with operating hours, overcharge, external electrical surge, internal electrical surge, short circuit and excess temperature
- Recall of the operating data bus voltage, bus current and temperature
- Language of display

The backlight of the display will be switched off automatically if the temperature inside the housing exceeds 50°C. Thus a high thermal load is avoided.

3.2. Key functions in display menu

▷	Confirms the selection, moves to the next step.
◁	One step back.
▽ △	Changes a setting (selects a setting or changes a value). The cursor (the blinking rectangle) indicates the selected menu item.
ok	Confirms the settings and returns to the device main menu.

3.3. Line reset

```
elsner elektronik
KNX PS640-IP
Normal Operation
Diagnostics >
```

In starting position, press key ▷ once.

```
Line Reset      >
Data Memory     >
Operating Data  >
Language        >
```

Press key ▷ once more in order to get into the sector „Line reset".

```
Reset: Yes
       No
       30 seconds
Reset not active!
```

Move the cursor (flashing rectangle at right edge) to the desired setting with the keys ▽ or △ and confirm with key **ok**.

Yes	Reset is activated. The line is switched to neutral and shorted. The basic setting displays: „Reset is active!"
No	Reset not activated. The power supply system works in normal operation.
30 seconds	A reset of 30 seconds is started. Afterwards, the line is supplied with voltage as usual. During the reset state, which lasts 30 seconds, the basic setting displays: „Reset active: XX sec" (countdown).

With key ◁, you return to the previous menu level.

3.4. Data memory

```
elsner elektronik
KNX PS640-IP
Normal Operation
Diagnostics >
```

In starting position, press key ▷ once.

```
Line Reset      >
Data Memory     >
Operating Data  >
Language        >
```

Move the cursor (flashing rectangle at right edge) to the „Data memory" menu with the keys ▽ and △ and confirm with ▷

```
Hours of Operation >
Overload           >
Ext. Overvoltage   >
Int. Overvoltage   > v
```

```
Short circuit      >
Excess Temperat.   >
```

Move the cursor to the desired menu with the up and down keys and press key ▷.

3.4.1. Operating hours

```
Run time:  0 years
 0 day  0 hrs.

< = Back
```

The operating hours of the power supply system are displayed in years, days and hours.

◁

3.4.2. Overload

```
Overload detected
 0 times. Duration:
 0 day. 0 hrs. 0 min
< = Back
```

The number of overload incidents and the total time in days, hours and minutes are displayed.

With key ◁ you return to the previous

3.4.3. External overvoltage

```
External Overvoltage
was detected
0 times.
< = Back
```

The number of external overvoltage incidents is displayed.

With key ◁ you return to the previous

3.4.4. Internal overvoltage

```
Internal Overvoltage
was detected
0 times.
< = Back
```

The number of internal overvoltage incidents is displayed.

With key ◁ you return to the previous

3.4.5. Short circuit

```
A short at the bus was
detected
 0 times.
< = Back
```

The number of short circuit incidents at the bus is displayed.

With key ◁ you return to the previous

3.4.6. Excess temperature

```
Excess Temperature on
the board
was detected
 0 times!
```

The number of excess temperature incidents on the circuit board of the device is displayed.

◁

3.5. Operating data

```
elsner elektronik
KNX PS640-IP
Normal Operation
Diagnostics >
```

In starting position, press key ▷ once.

```
Line Reset      >
Data Memory     >
Operating Data  > ▮
Language        >
```

Move the cursor (flashing rectangle at right edge) to the „Operating Data“ menu with the keys ▽ and △ and confirm with ▷

```
Bus Voltage   29.4 V
Bus Current   320 mA
Temperature  42.1°C
```

The current values of
- Bus voltage
- Bus current
- Temperature on the circuit board of the device

are displayed.

With key ◁ you return to the previous menu level.

3.6. Language

```
elsner elektronik
KNX PS640-IP
Normal Operation
Diagnostics >
```

In starting position, press key ▷ once.

```
Line Reset      >
Data Memory     >
Operating Data  >
Language        > ▮
```

Move the cursor (flashing rectangle at right edge) to the „Language“ menu with the keys ▽ and △ and confirm with the ▷

```
Sprache  :Deutsch ▮
Language :English
Idioma   :Espanol
Taal     :Hollands
```

Move the cursor to the desired language with the up and down keys and press the key **ok**. The display automatically jumps to the previous menu in the desired lan-

With key ◁ you get back by one menu level to the basic setting.

4. Disposal

After use, the device must be disposed of in accordance with the legal regulations. Do not dispose of it with the household waste!

5.

6. Setting of parameters (Software ETS)

6.1. General

Device name	[free entry]
The **KNX PS640-IP** can be assigned a name of your choice. The device name should be descriptive (e. g. Line TF). It is used to search for and recognize a device.	
Monitoring bus voltage failure	disable • enable
If a KNX failure is detected, it is reported on the IP. Return of the bus voltage is also reported.	
IP address assignment	automatic (DHCP) • manual
Automatic (DHCP): The IP address is automatically assigned on the DHCP, i.e. additional settings are not required. To be able to use this function, there must be a DHCP server in the LAN (many DSL routers have an integrated DHCP server). *Manual:* In this case, the IP address, the subnet and the gateway IP address must be entered manually.	

6.2. IP configuration

IP Routing Multicast address	
Byte 1 / 2 / 3 / 4	0 … 255
This address is used for routing telegrams on IP. The multicast IP address 224.0.23.12 was reserved (KNXnet/IP) at the IANA (Internet Assigned Numbers Authority) for this purpose. If a different multicast IP address is required, it must lie within the range of 239.0.0.0 to 239.255.255.255.	
IP address	
Byte 1 / 2 / 3 / 4	0 … 255
This is the IP address of the **KNX PS640-IP**.	

IP subnet	
Byte 1 / 2 / 3 / 4	0 … 255
Enter the subnet mask here. The device uses the values entered in this mask to determine whether there is a communications partner in the local network. If there is no partner in the local network, the device will not send the telegrams directly to the partner but to the gateway that routes the telegram.	
IP gateway address	
Byte 1 / 2 / 3 / 4	0 … 255
Enter the IP address of the gateway here. Note: If the **KNX PS640-IP** will only be used in the local LAN, the entry of 0.0.0.0 can remain unchanged.	

6.2.1. Example of assigning IP addresses

A PC is to be used to access the **KNX PS640-IP**.

IP address of the PC: 192.168.1.30

Subnet of the PC: 255.255.255.0

The **KNX PS640-IP** is located in the same local LAN, i. e. it uses the same subnet. The subnet constrains the IP addresses that can be assigned. In this example, the IP address of the **KNX PS640-IP** must be 192.168.1.xx, where xx can be a number from 1 to 254 (with the exception of 30, which is already in use). It must be ensured that no numbers are assigned twice.

IP address of the **KNX PS640-IP**: 192.168.1.31

Subnet of the **KNX PS640-IP**: 255.255.255.0

6.3. Routing (KNX -> IP)

Group telegrams (main group 0 to 13)	block • route • filter
Block: No group telegrams of this main group are routed to IP. *Route:* All group telegrams of this main group are routed to IP independent of the filter table. This setting is for testing purposes only. *Filter:* The filter table is used to check whether or not the received group telegram should be routed to IP.	
Group telegrams (main groups 14 and 15)	block • route
Block: No group telegrams of main groups 14 and 15 are routed to IP. *Route:* All group telegrams of main groups 14 and 15 are routed to IP.	
Group telegrams (main groups 16 to 31)	block • route
Block: No group telegrams of these main groups are routed to IP. *Route:* An additional page appears on which the routing of main groups 16 to 31 can be disabled or enabled in pairs. **Note:** The group addresses of main groups 16 to 31 are reserved addresses that can be used for special applications (e.g. in Easy Mode). These group addresses are not available in the ETS.	
Physically addressed telegrams	block • route • filter
Block: No physically addressed telegrams are routed to IP. *Route:* All physically addressed telegrams are routed to IP. *Filter:* The physical address is used to check whether the received physically addressed telegram should be routed to IP.	
Broadcast telegrams	block • route
Block: No received broadcast telegrams are routed to IP. *Route:* All received broadcast telegrams are routed to IP.	
Acknowledge (ACK) of group telegrams	always • only if routed
Always: An acknowledge is generated for every received group telegram (from KNX). *Only if routed:* An acknowledge is only generated for received group telegrams (from KNX) if they are routed to IP.	
Acknowledge (ACK) of physically addressed telegrams	always • only if routed • answer with NACK
Always: An acknowledge is generated for every received physically addressed telegram (from KNX). *Only if routed:* An acknowledge is only generated for received physically addressed group telegrams (from KNX) if they are routed to IP. Answer with *NACK:* Every received physically addressed telegram (from KNX) is responded to with NACK (not acknowledge). This means that communication with physically addressed telegrams on the corresponding KNX line is not possible. Group communication (group telegrams) is not affected. This setting can be used to block attempts at manipulation.	

6.4. Routing (IP -> KNX)

Group telegrams (main groups 0 to 13)	block • route • filter
Block: No group telegrams of these main groups are routed to KNX. *Route:* All group telegrams of this main group are routed to KNX independent of the filter table. This setting is used for testing purposes only. *Filter:* The filter table is used to check whether the received group telegram should be routed to KNX.	
Group telegrams (main groups 14 and 15)	block • route
Block: No group telegrams of main groups 14 and 15 are routed to KNX. *Route:* All group telegrams of the main groups 14 and 15 are routed to KNX.	
Group telegrams (main groups 16 to 31)	block • route
Block: No group telegrams of these main groups are routed to KNX. *Route:* An additional page appears on which the routing of main groups 16 to 31 can be disabled or enabled in pairs.	
Physically addressed telegrams	block • route • filter
Block: No physically addressed telegrams are routed to KNX. *Route:* All physically addressed telegrams are routed to KNX. *Filter:* The physical address is used to check whether the received physically addressed telegram should be routed to KNX.	
Broadcast telegrams	block • route
Block: No received broadcast telegrams are routed to KNX. *Route:* All received broadcast telegrams are routed to KNX.	
Resending of group telegrams	block • route
Disable: The received group telegram is not resent to KNX in case of a fault. *Enable:* The received group telegram is resent up to three times in case of a fault.	
Resending of physically addressed telegrams	block • route
Disable: The received physically addressed telegram is not resent to KNX in case of a fault. *Enable:* The received physically addressed telegram is resent up to three times in case of a fault.	
Resending of broadcast telegrams	block • route
Disable: The received broadcast telegram is not resent to KNX in case of a fault. *Enable:* The received broadcast telegram is resent up to three times in case of a fault.	

7. ETS Connection Manager

If the IP-configuration of the **KNX PS640-IP** is valid the device can act as an interface to KNX. The following configuration is necessary:

Select the button „Settings“ and the tab „Communication“ in the main window of ETS4. All available connections are listed by „Configured connections“. Select the desired connection.
The button „Local settings“ enables the configuration of the individual address, which is used for bus access.

A dummy device may be created in the ETS-project to reserve this address.
The **KNX PS640-IP** supports up to 5 connections simultaneously. An additional physical address has to be reserved for every connection. The first additional physical address is allocated (as shown above) to the connection in the ETS. The remaining additional addresses can be assigned directly by the device, in which cast the learn button should be pressed for at least one second. The automatic address allocation is performed as: Connection 2 contains the next higher address from Connection 1,
Connection 3 the next higher from Connection 2
etc.

For example:

Connection 1 uses the additional individual address 15.15.250.
Connection 2 is automatically set to 15.15.251, connection 3 is 15.15.252, connection 4 is 15.15.253 and connection 5 is 15.15.254.
The assignment of the additional individual addresses is shown by a fast blinking learn led.

Note: It is necessary to check whether the additional individual addresses are unused before they are assigned.
For new devices (i.e. in the factory settings state), only the additional individual address of the first connection is active with the address 15.15.250. To support multiple concurrent connections the additional address assignment is required.